S-12-2R-200　伸縮（水平・高さ・突っ張り）
中間水平調金具

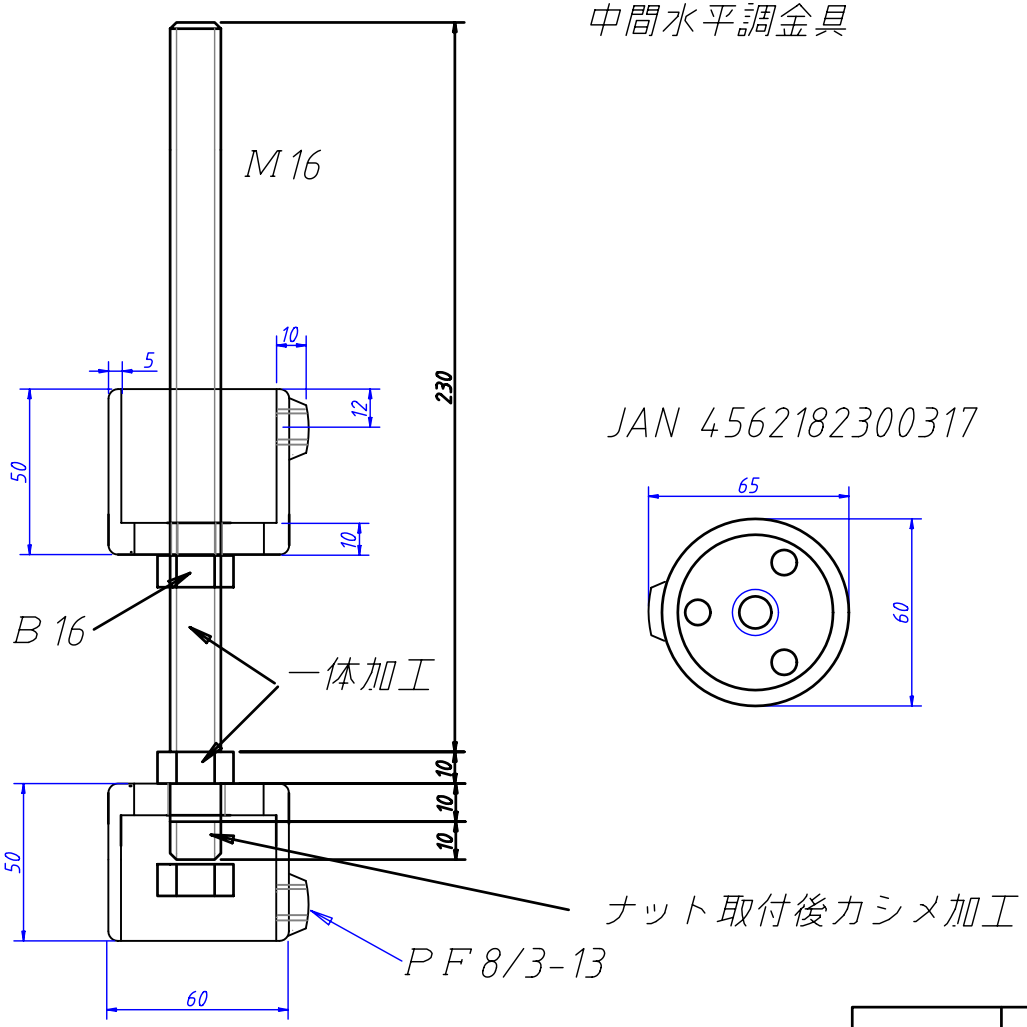

JAN 4562182300317

調整範囲200mm

FILM NAME	F-999-20110628 Auto CAD
DRAWN CHECK APPR ISSUED	S-12-2R 200 joint kogyo T.okano