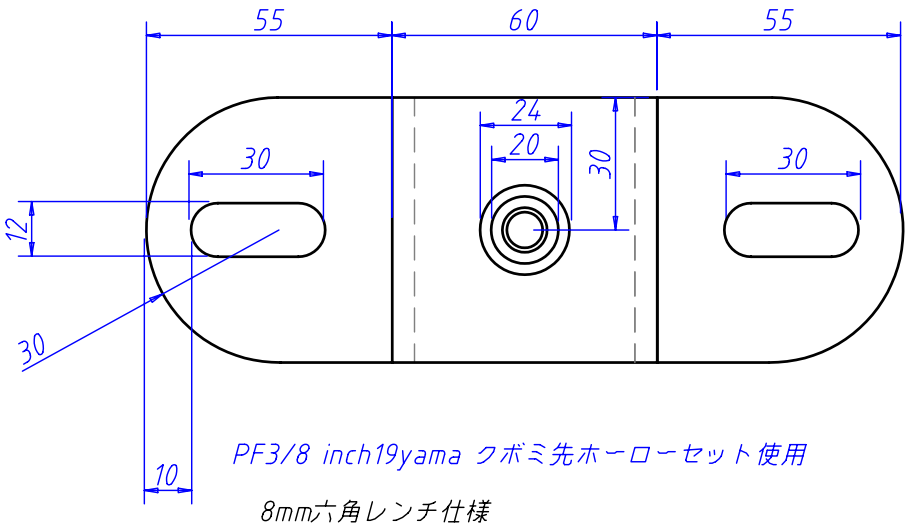

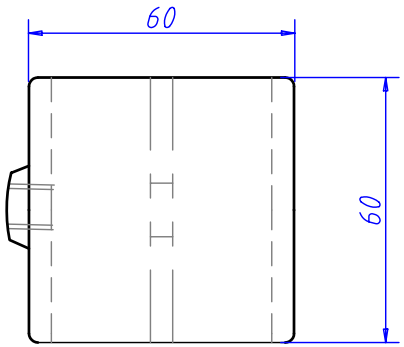

PF3/8 inch19yama クボミ先ホーローセット使用

8mm六角レンチ仕様

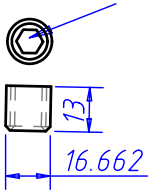

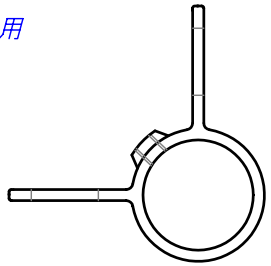

S-8-1L
JAN4562182300737

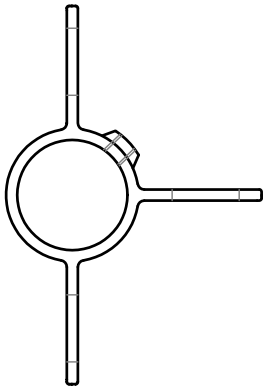

S-8-1E
JAN4562182300744

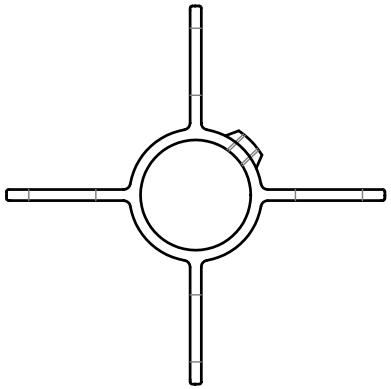

S-8-1X
JAN4562182300751

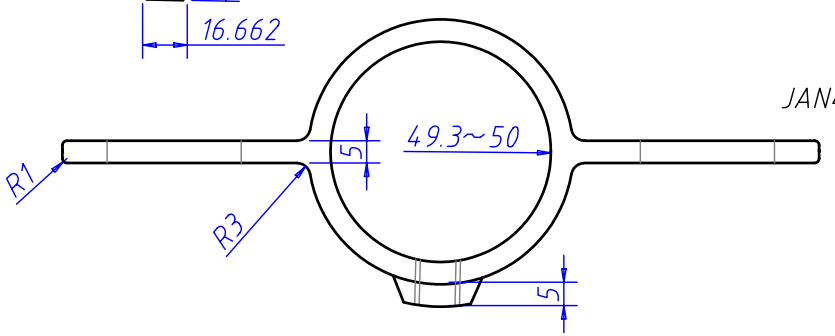

S-8-1W
JAN4562182300720

FILM NAME	F-999-20120223 Auto CAD
DRAWN CHECK APPR ISSUED	S-8-1W/1L/1E/1X joint kogyo T.okano