14-3Y65・14-3Y100・14-3Y150/15-3Y500・15-3Y500(アンカー)・15-3Y2000

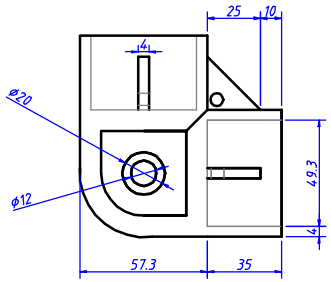

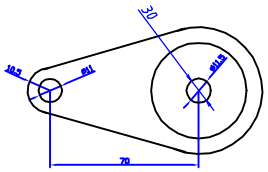

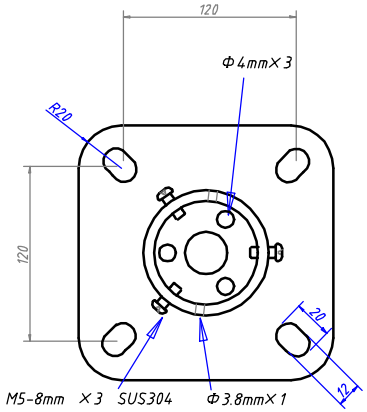

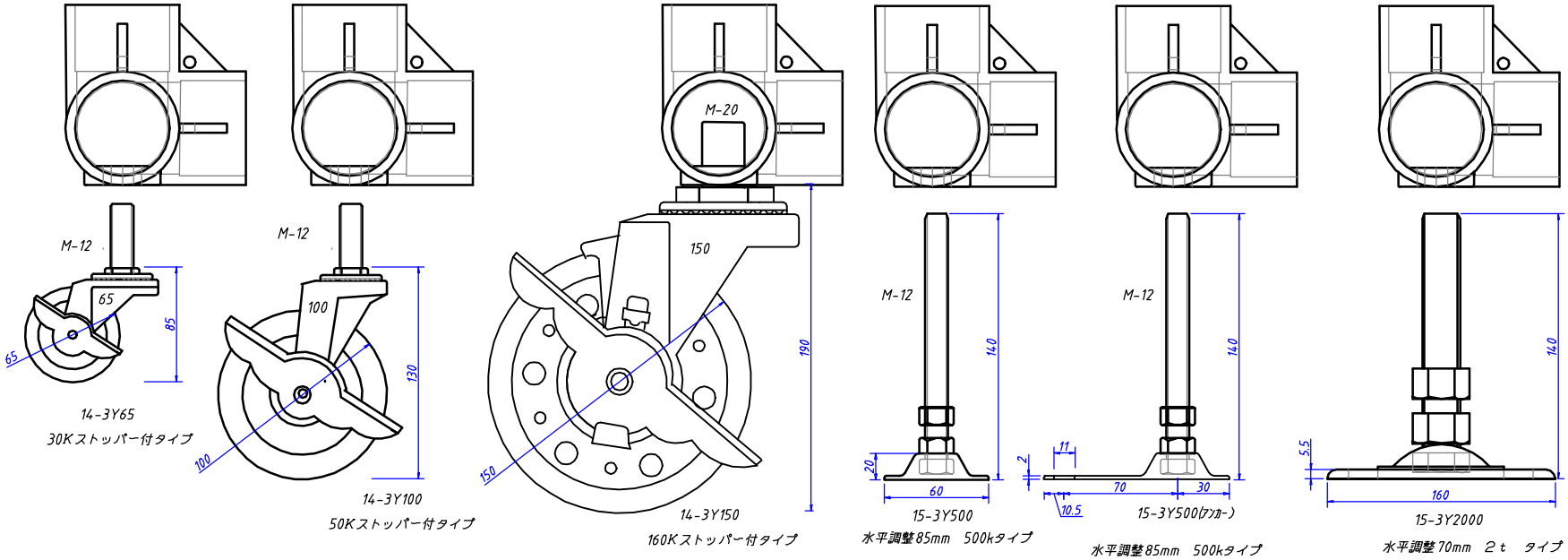

FILM NAME	F-999-20070524 Auto CAD
DRAWN CHECK APPR ISSUED	14・15-3Y joint kogyo T.okano