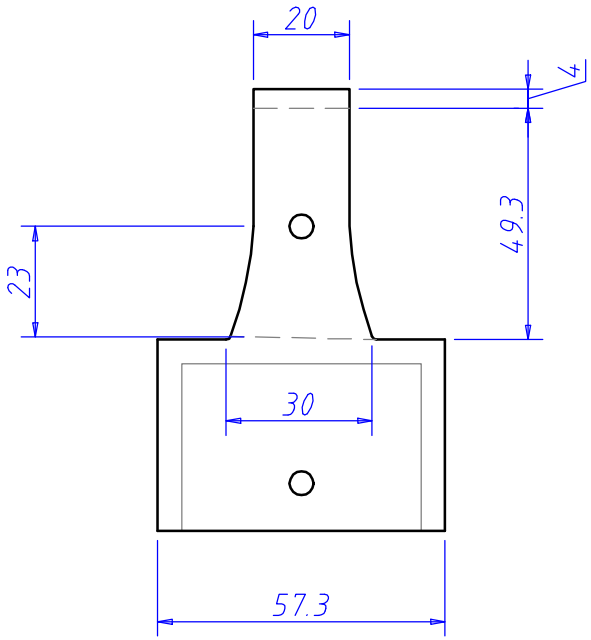

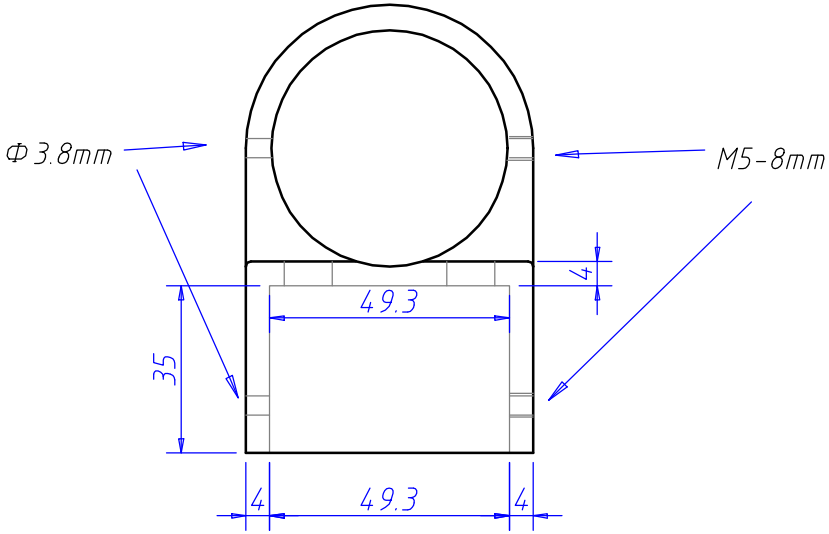

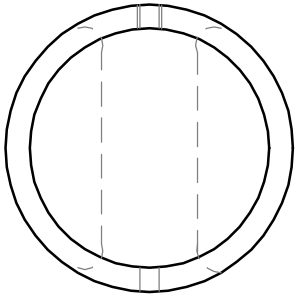

注記　内面バリは最小限にする

FILM NAME	F-999-20070605 Auto CAD
DRAWN CHECK APPR ISSUED	3-2T-S　SET SCREW COUP joint kogyo T.okano