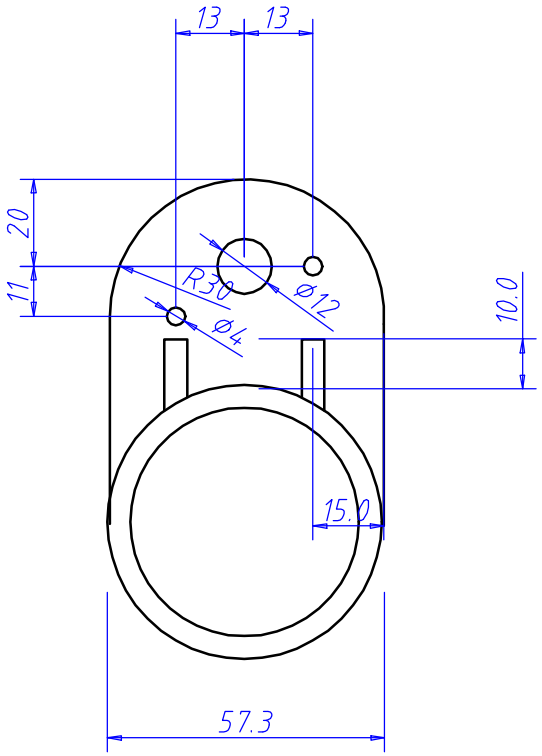

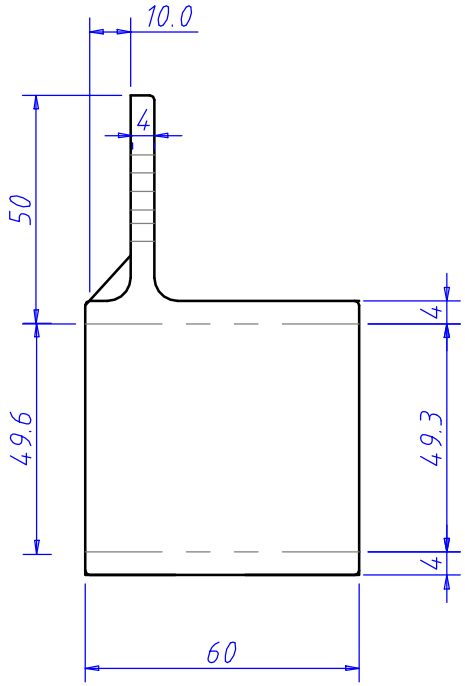

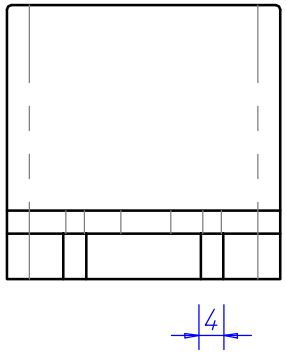

注記　内面バリは最小限にする

JAN 4562182301093

FILM NAME	F-999-20040824 Auto CAD
DRAWN CHECK APPR ISSUED	9-1Z SET SCREW COUP joint kogyo T.okano